48" I.D. PRECAST MANHOLE - 6" STRAIGHT BASE

WITH INVERT CHANNEL

NOT TO SCALE: ALL DIMENSIONS ARE SUBJECT TO ALLOWABLE SPECIFICATION TOLERANCES

MATERIALS & FEATURES
CONCRETE: 4,000 PSI, 28 DAY STRENGTH.
AVERAGE WEIGHT OF 26" DEPTH BASE W/ 8" INVERT = 5,100 LBS
EXCEEDS ASTM C-478-03A
WATER-TIGHT NPC GASKETS AT ALL PIPE CONNECTIONS
HOLES AS SPECIFIED - MAX. 32" Φ

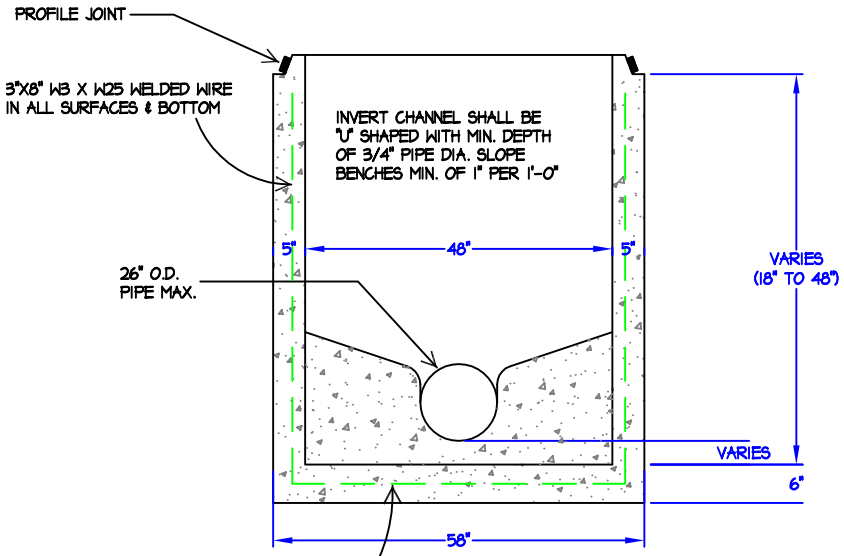

#4 BAR @ 90° CROSS IN BOTTOM & SIDES
#4 BAR @ 12" ON CENTER EACH WAY IN BOTTOM (CONTINUOUS AROUND OPENINGS & SIDES)

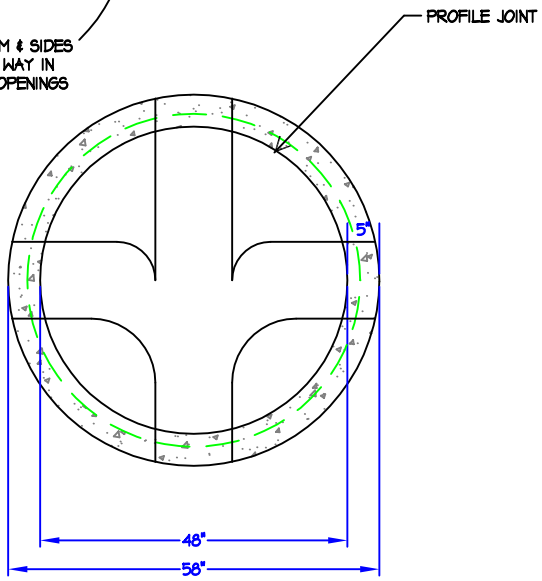

FOR PIPE ENTERING THE MANHOLE AT EXCESSIVE DEPTHS ABOVE THE FLOW LINE OUT, THE CONTRACTOR MAY BE RESPONSIBLE FOR GROUT WORK NECESSARY TO BRING CHANNEL UP TO FLOW LINE ON INLET PIPE.

CONTRACTOR RESPONSIBLE FOR ADDITIONAL FILLER AROUND PIPE AFTER INSTALLATION.

GROUTED INVERT W/OFFSET TO MATCH FLOWLINE OF PIPE SLIGHT FIELD MODIFICATIONS MAY BE NECESSARY

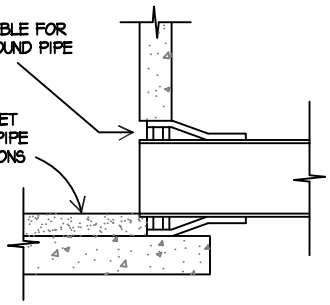

PIPE INLET DETAIL

Capital Concrete Products
5264 Hwy. 71 East • Del Valle, Texas 78617

TITLE:	48" I.D. PRECAST STRAIGHT 6" BASE - INV. CH.
FILE LOC.:	MANHOLES/ 48 ID MANHOLES
DRAWN BY:	SUSAN MENTA
DATE:	OCTOBER 14, 2009