# 12' X 12' I.D. ELECTRICAL MANHOLE

NOT TO SCALE: ALL DIMENSIONS ARE SUBJECT TO ALLOWABLE SPECIFICATION TOLERANCES

MATERIALS & FEATURES
CONCRETE: 5,000 PSI, 28 DAY STRENGTH.
REINFORCING: ASTM A-615, GRADE 60
LOADING: DESIGNED FOR H20 LOADING
C.I. CASTINGS: ASTM A48, CLASS 30/35

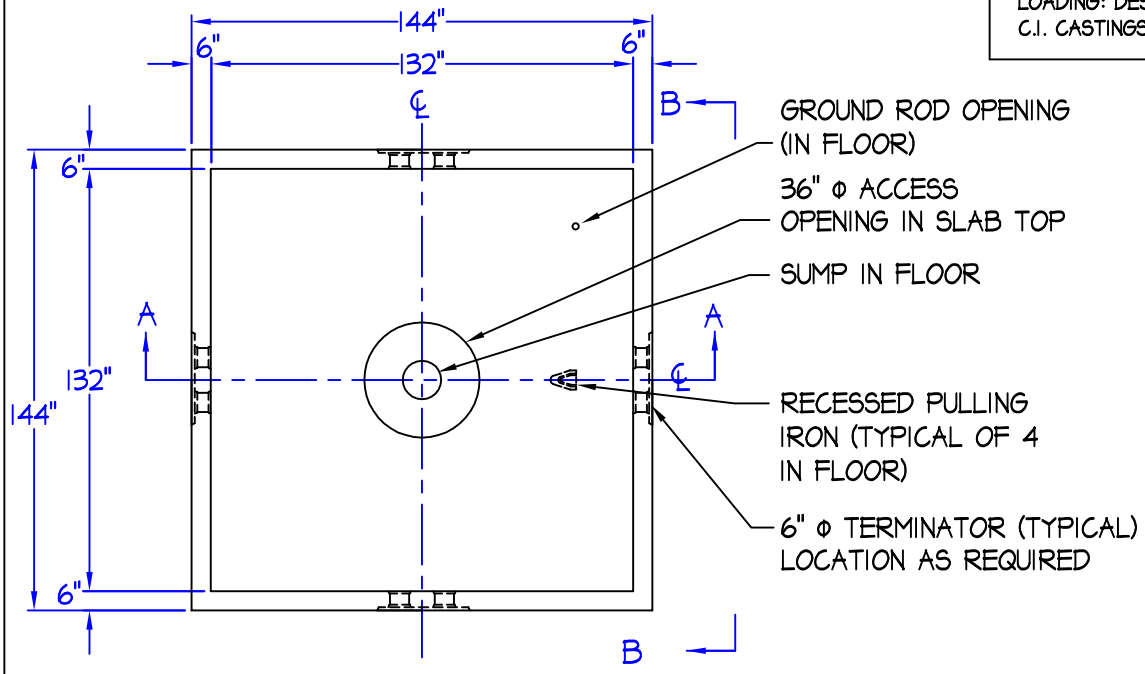


PLAN VIEW

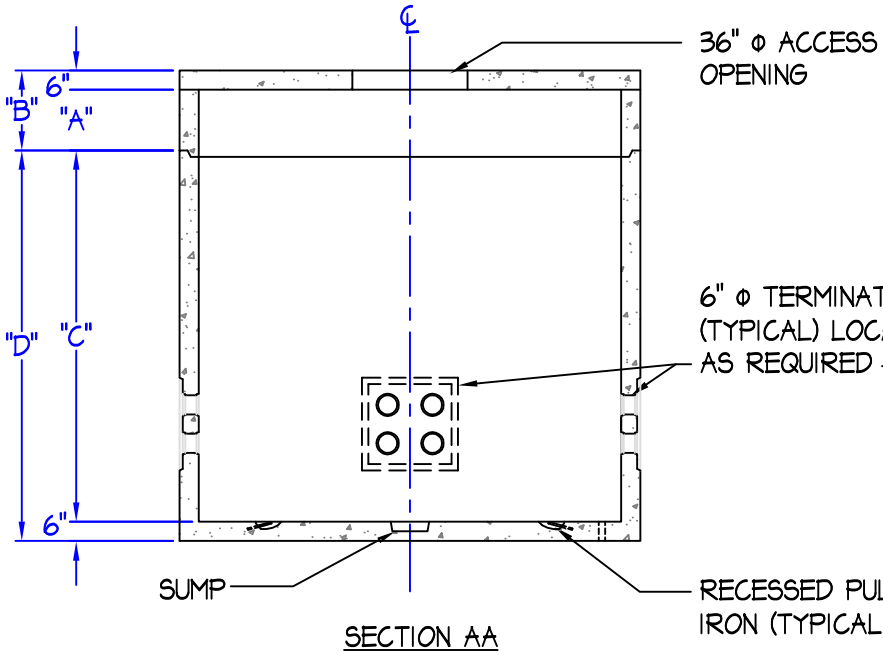


SECTION AA

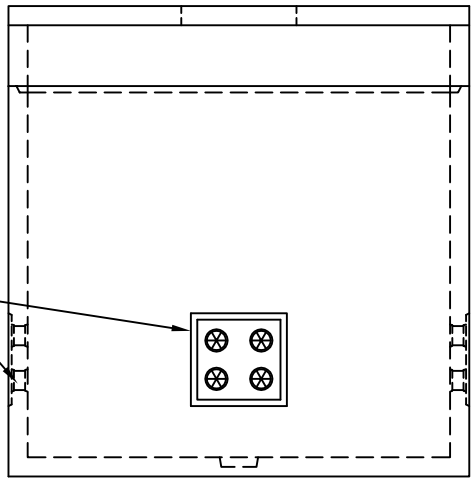

ELEVATION BB


Capital Concrete Products
5264 Hwy. 71 East • Del Valle, Texas 78617


| | |
|---|---|
| TITLE: | 12' X 12' ID ELECTRICAL MANHOLE |
| FILE LOC.: | ELECTRIC MANHOLE/ 12X12 ID ELECTRIC MANHOLE |
| DRAWN BY: | SUSAN MENTA |
| DATE: | OCTOBER 14, 2009 |